Gearbox with spur gear no backlash 2138 ø38mm - 0.3…0.45 Nm

Technical data

Output shaft material	Stainless steel
Cover material	Plastic
Radial play at 5mm from bearing	0.1mm
Axial play	0.2mm
Average backlash at no-load	0°
Max. radial force at 5mm from bearing	50N
Max. axial force	30N

Part number

Gearbox N° — Standard

2138 xxxx 00

Ratio

Example with Ratio 200:1

2138 0200 00

Characteristics

Ratio		80:1 120:1 200:1 270:1 300:1	360:1 500:1 540:1 600:1 900:1 1000:1
No. of gear stages		5	6
Max. torque permanent	Nm	0.3	0.45
Max. torque intermittent	Nm	0.6	0.9
Dir. of rotation entrance - exit		≠	=
Mass	g	73	76
Length gearbox L1	mm	25.9	25.9
Length gearbox L1 (no cover)	mm	22.5	22.5

Other ratio on request
Other adaptor flange on request

(cotation mm, tolerances µm)

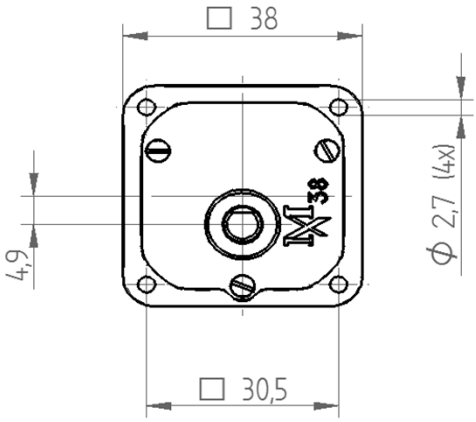

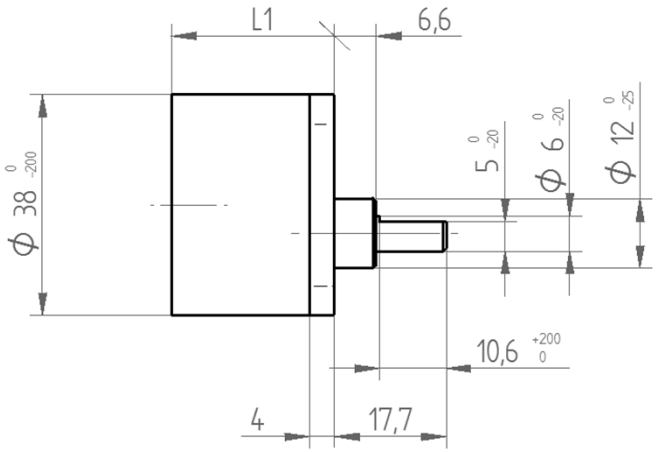

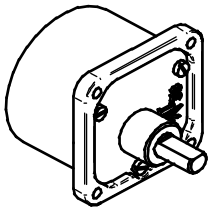

Standard adaptor flanges

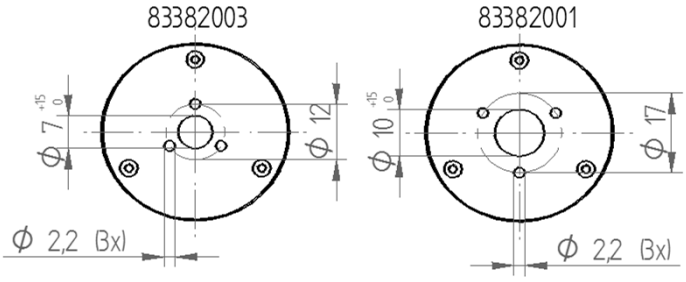

MECATIX