22ECS60 Ultra EC™ 2 pole Ø22mm 180 W

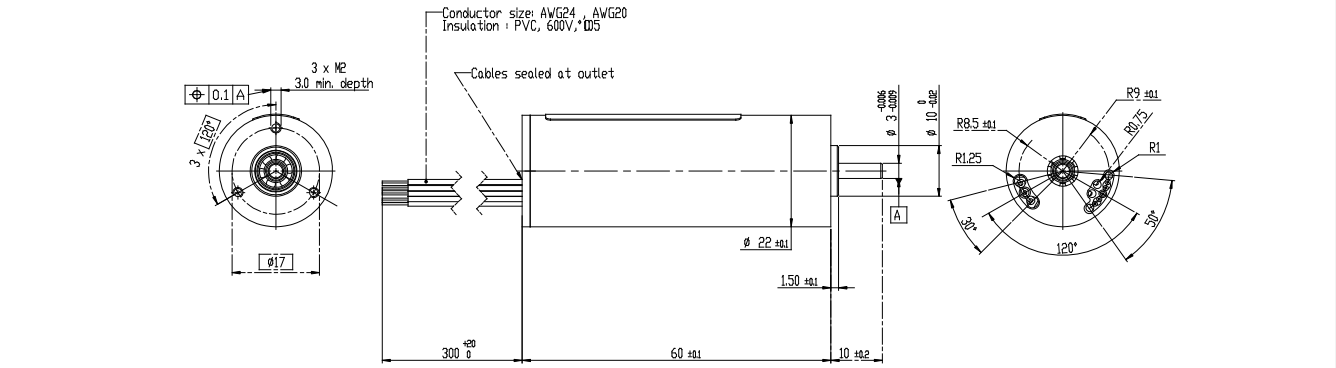

Dimensions in mm

22ECS60 10B - **

Electrical Data	**	24	21	17	16	
1 Nominal Voltage	U_N	24	24	24	24	Volt
2 Optimization Direction	-	CCW	CCW	CCW	CCW	-
3 No-Load Speed	n_0	32,000	35,000	43,000	47,000	rpm
4 Typical No-Load Current	I_0	120.0	150.0	190.0	210.0	mA
5 Max Continuous Mechanical Power (@25°C)	P_{max}	120.0	180.0	180.0	180.0	W
6 Max Continuous Current	$I_{e\,max}$	6.1	7.1	8.7	9.3	A
7 Max Continuous Torque	$M_{e\,max}$	44.1 (6.25)	45.9 (6.5)	44.5 (6.31)	45 (6.38)	mNm (oz-in)
8 Back EMF Constant	K_E	0.76	0.68	0.53	0.51	V/1000 rpm
9 Torque Constant	k_M	7.3	6.5	5.1	4.8	mNm/A
10 Motor Regulation	R/k^2	3.9	3.6	3.8	3.7	10^3/Nms
11 Motor Regulation	$k/R^{½}$	16 (2.27)	16.7 (2.37)	16.1 (2.28)	16.3 (2.31)	mNm/W^{½} (oz-in/W^{½})
12 Internal Resistance - phase to phase	R_I	0.21	0.15	0.10	0.09	ohms
13 Line to Line Resistance at Connectors	R_L	0.23	0.17	0.13	0.12	ohms
14 Inductance Phase to Phase	L	0.00	0.03	0.02	0.02	mH
15 Mechanical Time Constant	t_m	1.4	1.3	1.3	1.3	ms
16 Electrical Time Constant	t_e	0.17	0.17	0.17	0.17	ms

General Data			
17 Maximum Motor Speed	n_{max}	60,000	rpm
18 Ambient Working Temperature Range	-	-30 to + 100 (-22 to + 212)	°C (°F)
19 Ambient Storage Temperature Range	-	-40 to + 100 (-40 to + 212)	°C (°F)
20 Ball Bearings Preload	-	5.0	N
21 Axial Static Force w/o Shaft Support (max)	-	34.0	N
22 Maximum Winding Temperature	-	125 (257)	°C (°F)
23 Thermal Resistance	R_{th1}/R_{th2}	1 / 8.4	°C/W
24 Thermal Time Constant	t_w	1,200	s
25 Weight	-	140 (4.93)	g (oz)
26 Rotor Inertia	J	3.500	g.cm^2
27 Hall Sensor Electrical Phasing	-	120	Electrical °

with hall effect sensors	
Wire	Description
Grey	Phase 1
Violet	Phase 2
Blue	Phase 3
Green	3.5 to 27V DC
Yellow	GND
Orange	Sensor 1
Red	Sensor 2
Brown	Sensor 3
Black	NTC 1
White	NTC 2

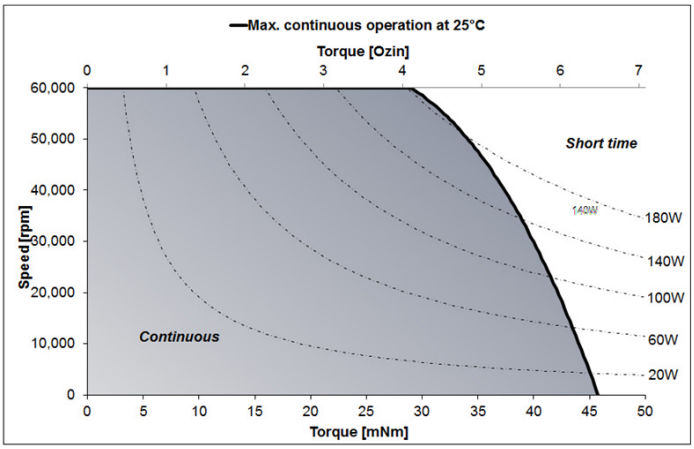

© 2016 Portescap. Specifications subject to change without notice.