■ Motor Specifications

1	Drive Input power supply		208~240VAC
2	Basic DC Bus Voltage	V（DC）	320V
3	Rated Output Power	Watts	2500
4	Rated Speed	rpm	3000
5	Max. Mechanical Speed	rpm	5600
6	Rated Torque	Nm	8
7	Continuous Stall Torque	Nm	9.2
8	Peak Torque	Nm	24
9	Rated Current	A (rms)	13.8
10	Continuous Stall Current	A (rms)	15.9
11	Peak Current	A (rms)	48.6
12	Voltage Constant ±10%	V(rms)/K rpm	37.4
13	Torque Constant ±10%	Nm/A(rms)	0.61
14	Winding Resistance(Line-Line)±10%	Ohm @20℃	0.24
15	Winding Inductance(Line-Line)±20%	mH	3.16
16	Inertia	kg m^2	0.000368
17	Thermal Resistance(mounted)	℃ / W	1.04
18	Thermal Time Constant	Minutes	24
19	Heat Sink Size(Aluminum)	mm	300×300×12
20	Shaft Load - Axial	N (max.)	90N /20.2 Lbf
21	Shaft Load - Radial(End of Shaft)	N (max.)	270 N / 60.6 Lbf
22	Weight	kg	6.2 kg /13.6Lb
23	Approvals	CE,cULus,RoHS	
24	Encoder Resolution & Protocol	21bit Absolute Multi-turn TMGW Protocol	
25	Encoder Type	Magnetic △1	
26	Insulation Class	F (155℃)	
27	IP rating	IP65(except shaft through hole and cable end connector)	
28	Installation Location	Indoors, free from direct sunlight, corrosive gas, inflammable gas	
29	Ambient Temperature	Operating 0 to 40℃, Storage -20 to 80℃	
30	Ambient Humidity (max.)	85% (free from condensing)	
31	Altitude (max.)	1000 m	
32	Vibration Resistance	10-150Hz 49 m/s^2	
33	Rotor Poles	10	

Shaft Load: (L_{10} life, 20,000 hours, 2,000 RPM)

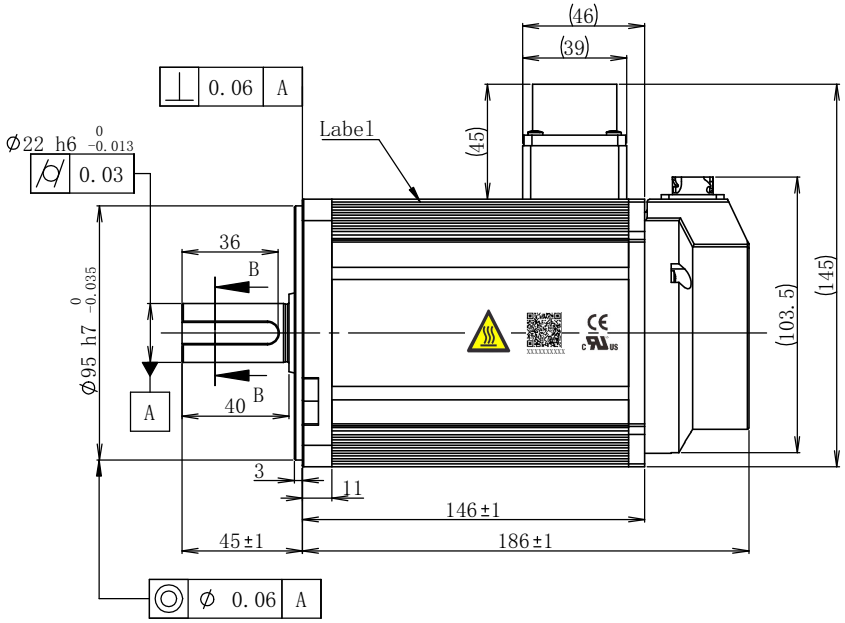

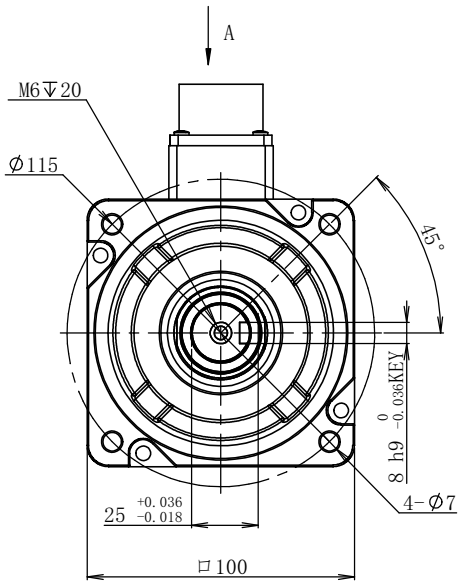

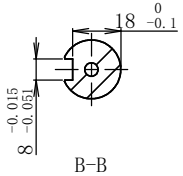

Motor Power Connector:
XMS3102A20-18S(EUMACX)

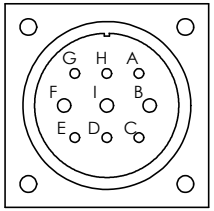

View A

Pin#	A	B	C	D	E
Signal	GND	W	N/C	N/C	N/C
Pin#	F	G	H	I	
Signal	U	N/C	N/C	V	

Encoder Connector:
XM10-S10S-C(EUMACX)

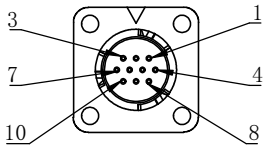

View A

Pin#	1	2	3	4	5
Signal	5V	GND	SD-	SD+	Battery+
Pin#	6	7	8	9	10
Signal	Battery-	N/C	N/C	N/C	Shield

● **Motor Phases**

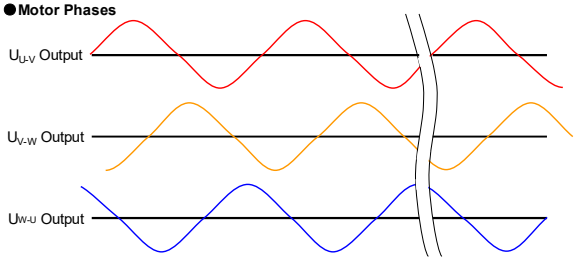

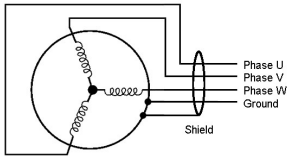

All the timing logics are obtained in CCW rotation as viewed from front shaft.

Notes:
1. A shaft seal is shipped with motor, but not installed.
2. A KEY is shipped with motor, but not installed.

Item Number
S0034

Unit: mm
First Angle Method

Tolerances for linear and angular dimensions without individual tolerance indications
GB/T 1804-m eqv ISO 2768-1:m
Geometrical tolerance for features without individual tolerance indications
GB/T 1184-K eqv ISO 2768-2:K
UNLESS OTHERWISE SPECIFIED

REV	Sign	Quantity	ECN NO.	Date
A1	△1	1		2023.11.30
A0			Preliminary	2023.08.07

Design		Technology	
Standard		Audit	
Check		Approve	
Marketing Dep	□	Date	

Applied Motion Products
A MOONS' COMPANY
MOONS'
moving in better ways

SM3L-105AXNUV
461170001631

Stage	Quality	Scale
D		1:2
Sheet		1 of 1

Shanghai AMP & MOONS' Automation Co.,Ltd