■ Motor Specifications

1	Drive Input power supply		208～240VAC
2	Basic DC Bus Voltage	V（DC）	320V
3	Rated Output Power	Watts	1300
4	Rated Speed	rpm	1500
5	Max. Mechanical Speed	rpm	3000
6	Rated Torque	Nm	8.34
7	Continuous Stall Torque	Nm	9.1
8	Peak Torque	Nm	25
9	Rated Current	A (rms)	9.6
10	Continuous Stall Current	A (rms)	9.6
11	Peak Current	A (rms)	29.6
12	Voltage Constant ±10%	V(rms)/K rpm	54.2
13	Torque Constant ±10%	Nm/A(rms)	0.869
14	Winding Resistance(Line-Line)±10%	Ohm @20℃	0.66
15	Winding Inductance(Line-Line)±20%	mH	5.4
16	Inertia	kg m^2	0.00205
17	Thermal Resistance(mounted)	℃ / W	0.66
18	Thermal Time Constant	Minutes	24 Min
19	Heat Sink Size(Iron)	mm	400×400×20
20	Shaft Load - Axial	N (max.)	343N /77 Lbf
21	Shaft Load - Radial(End of Shaft)	N (max.)	686N / 154 Lbf
22	Weight	kg	9.5 kg /20.9 Lb
23	Approvals	CE,cULus,RoHS	
24	Encoder Resolution & Protocol	21bit Absolute Multi-turn TMGW Protocol	
25	Encoder Type	Magnetic	
26	Insulation Class	F (155℃)	
27	IP rating	IP65(except shaft through hole and cable end connector)	
28	Installation Location	Indoors, free from direct sunlight, corrosive gas, inflammable gas	
29	Ambient Temperature	Operating 0 to 40℃, Storage -20 to 80℃	
30	Ambient Humidity (max.)	85% (free from condensing)	
31	Altitude (max.)	1000 m	
32	Vibration Resistance	10-150Hz 49 m/s^2	
33	Rotor Poles	10	

Shaft Load: (L_{10} life, 20,000 hours, 2,000 RPM)

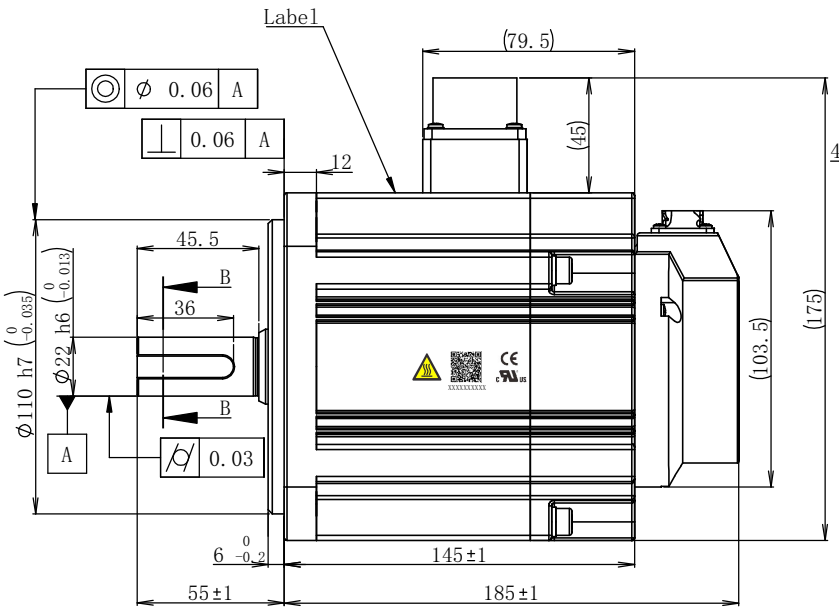

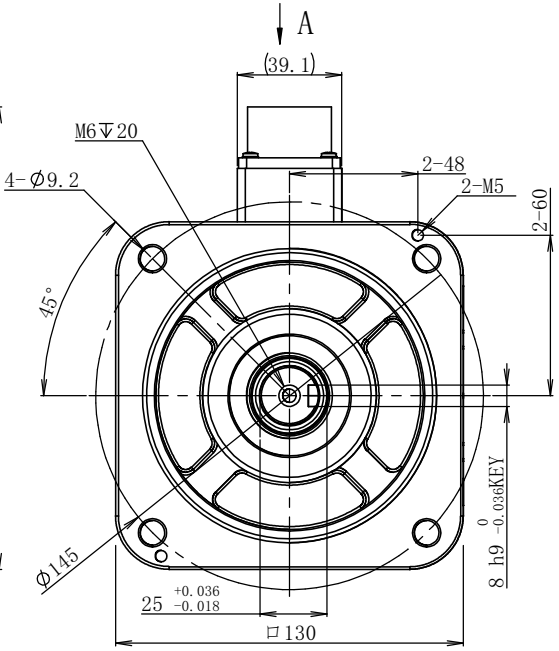

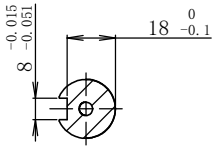

B-B

Motor Power Connector:
Brake Connector:
XMS3102A20-18S(EUMACX)

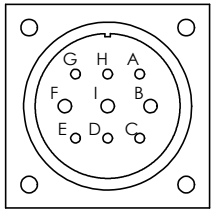

View A

Pin#	A	B	C	D	E
Signal	GND	W	+24V	0	N/C
Pin#	F	G	H	I	
Signal	U	N/C	N/C	V	

Static Friction Torque:14.3N.m

Encoder Connector:
XM10-S10S-C(EUMACX)

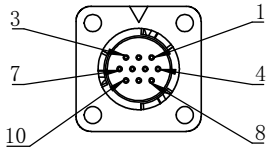

View A

Pin#	1	2	3	4	5
Signal	5V	GND	SD-	SD+	Battery+
Pin#	6	7	8	9	10
Signal	Battery-	N/C	N/C	N/C	Shield

●Motor Phases

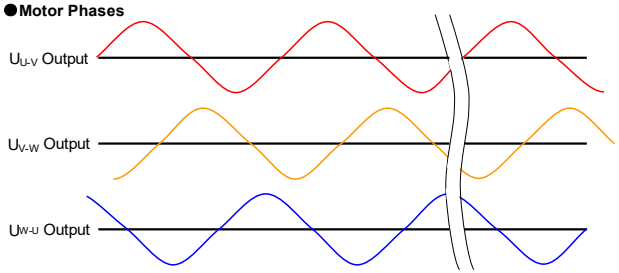

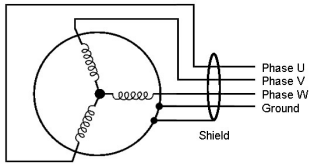

All the timing logics are obtained in CCW rotation as viewed from front shaft.

Notes:
1. A shaft seal is shipped with motor, but not installed.
2. A KEY is shipped with motor, but not installed.

Item Number
S0034

Unit: mm
First Angle Method

Tolerances for linear and angular dimensions without individual tolerance indications
GB/T 1804-m eqv ISO 2768-1:m
Geometrical tolerance for features without individual tolerance indications
GB/T 1184-K eqv ISO 2768-2:K
UNLESS OTHERWISE SPECIFIED

REV.	Sign	Quantity	ECN NO.	Date
A1		1		2023.11.30
A0			Preliminary	2023.09.08

Design		Technology	
Standard		Audit	
Check		Approve	
Marketing Dep		Date	

Applied Motion Products
A MOONS' COMPANY
MOONS'
moving in better ways

SM3H-133AXBUV
4611170001623

Stage	Quality	Scale
D		1:2
Sheet		1 of 1

Shanghai AMP & MOONS' Automation Co.,Ltd